User Guide
1-Wire Controller 1 Bluetooth

- 1-Wire Controller for autonomous communication and updating of the 1-Wire network.
- Fast readout of all 1-Wire devices in 1-2 seconds cycle
- Cyclic output of the prepared 1-Wire data in plain text
- Data logging when communication to the control system/host system is interrupted (option)
- Power supply for 1-Wire network
- Designed for small to large 1-Wire networks
- DIN rail housing for control cabinet installation
- Wide supply voltage range
- Management of all ESERA-Automation and many standard 1-Wire modules

1 Introduction

Before you start to install the 1-Wire Controller 1 and put the device into operation, please read this operating manual through to the end, especially the section on safety instructions.

2 Product Description

Self-sufficient management

The 1-Wire Controller 1 is designed for the autonomous management of a 1-Wire network. You no longer need to worry about 1-Wire commands or formulas for evaluating sensor data. The controller independently scans the 1-Wire network for devices (sensors and actuators) and, depending on the device found, outputs the corresponding data in plain text.

Formatted data output

The 1-Wire Controller 1 provides the sensor and actuator data ready prepared, e.g. for temperature sensors in C°, cyclically off. Only one division by 100 is necessary.
In addition, the article number for ESERA modules can be entered, the calculation and output is adapted to the function of the module.

Designed for all 1-Wire networks

The 1-Wire interface of the 1-Wire Controller 1 is specially designed to safely operate from small to very large 1-Wire networks with long cable runs. 1-Wire sensors can be operated simultaneously in parasitic or normal mode.
The currently strongest 1-Wire interface for maximum data security, even for complex network structures, has been installed.

System time / real time clock

You do not have a real-time clock with battery buffering in your system? No problem, the 1-Wire controller gladly provides the time with date. A real-time clock with battery buffering is integrated.

Power supply

For power supply, the 1-Wire Controller 1 has a wide range input of 9 - 30VDC and is therefore equally suitable for 12V and industry standard 24VDC supplies.
Suitable DIN rail or plug-in power supplies can be found in our webshop.

Commissioning
How to Videos for commissioning and configuration can be found on our website www.esera.de at Service and Support, How to and Support Videos.

3 Technical Data

Connection:	Bluetooth, long distance data connection up to 100/30m
Bluetooth:	V2.0 + DER, 2.4GHz frequency (2.42 to 2.48GHz), class 1
Transmission power max.	+18dBm
Receiver:	USB-Bluetooth- Adapter, Bluetooth Access Point
Range:	approx. 100m in free field, approx. 30m in building
Terminal device interface:	Virtual serial port via SPP
Supply voltage:	9-30VDC
Current consumption:	max. 500mA
1-Wire interface:	1-Wire bus (5V, ground and data)
Protection circuits:	ESD and reverse polarity protection
Connection:	screw terminals (up to 2.5qmm cable cross section)
Output voltage:	5V (+/-10%), max. 200mA, overload and short circuit proof

4 Ambient conditions

Temperature, operation	-10°C to +55°C
Air humitidy:	10 - 92% (non-condensing)
Protection system:	IP20
Protection class:	III
Dimensions:	35 x 90 x 70mm (WxHxD)

5 Conformity

EN 50090-2-2
EN 61000-4-2, ESD
EN 61000-4-3, HF
EN 61000-4-4, Burst
EN 61000-4-5, Surge
EN 61000-6-1, interference immunity
EN 61000-6-3, interference radiation
RoHS

6 Software

In order to protect controller 1 from unauthorized access, a password/key must be entered before a data connection is established. This signals to Controller 1 that the connection setup is an authorized access.
The factory default is key 1304.

7 Setting up Bluetooth

A Bluetooth adapter must be available and set up on the end device, i.e. the device that is to exchange data with the Bluetooth module. If a connection to controller 1 is then established, the driver software sets up a virtual COM port on the device. Any application can then send and receive data via this port.
With a virtual COM port, the baud rate setting has no meaning, so that a baud rate of, for example, 19,200 bps and 8N1 can be selected as transmission parameters.

7.1 Driver for Bluetooth - Adapter

Bluetooth adapters with USB interface or Bluetooth access point devices are available.
The drivers for the Bluetooth adapter must be set up on the control unit/computer according to the instructions of the adapter manufacturer.
Depending on the operating system, the setup and the connection establishment will work slightly differently. However, the Bluetooth adapters always set up a service or program that can be used to search for Bluetooth devices in the vicinity. If a Controller 1 is in range, the device is recognized as Controller 1 (Serial Adapter) and a connection can be established.

Setup on Linux
Here is a short guide for Linux:

- Bind device using the normal Bluetooth functions
- Run hcitool scan and remember the MAC
- Create /etc/bluetooth/rfcomm.conf file if necessary
- recomm.conf add the following entry:

```
# RFCOMM configuration file.
rfcomm0 {
# Automatically bind the device at startup
bind yes;
# Bluetooth address of the device
device 00:12:6F:2B:B1:52;          #Here you enter the MAC address of the 1-Wire Controller 1
# RFCOMM channel for the connection
channel 1;
# Description of the connection
comment "1-Wire_Controller1";
}
```

Device must of course be adapted.

- rfcomm connect *00:12:6F:2B:B1:52* execute in the console.
- Now the serial interface can be accessed with a normal terminal program. (/dev/rfcomm0)

8 Display LED

The module has various display LEDs. In the following the function of the displays

Display	Bezeichnung	Funktion
LED Green	PWR	Display for supply voltage
LED Green	DATA	• After switching on the device the LED flashes 3x • flashes during 1-Wire activity • flashes when data is sent via the data interface • flashes very quickly if "CAL Receive" has been activated and the "CAL messages" of the control system are missing.
LED Green Data interface		Network Link LED, Lights up when a network connection is established
LED Green Data interface		Network Data LED Lights up during data communication via the data interface

9 Connection diagram

Module top side (1-Wire Bus)
(Module top side)
7 = ground 1-Wire
8 = 1-Wire Data
9 = + 5V output

Module bottom side (power supply)
1 = Minus Supply voltage
2 = Plus Supply voltage

Note: Basics and tips for the 1-Wire Bus system can be found in our eBook in the shop at
http://www.esera.de/schulung-support/dokumentation/

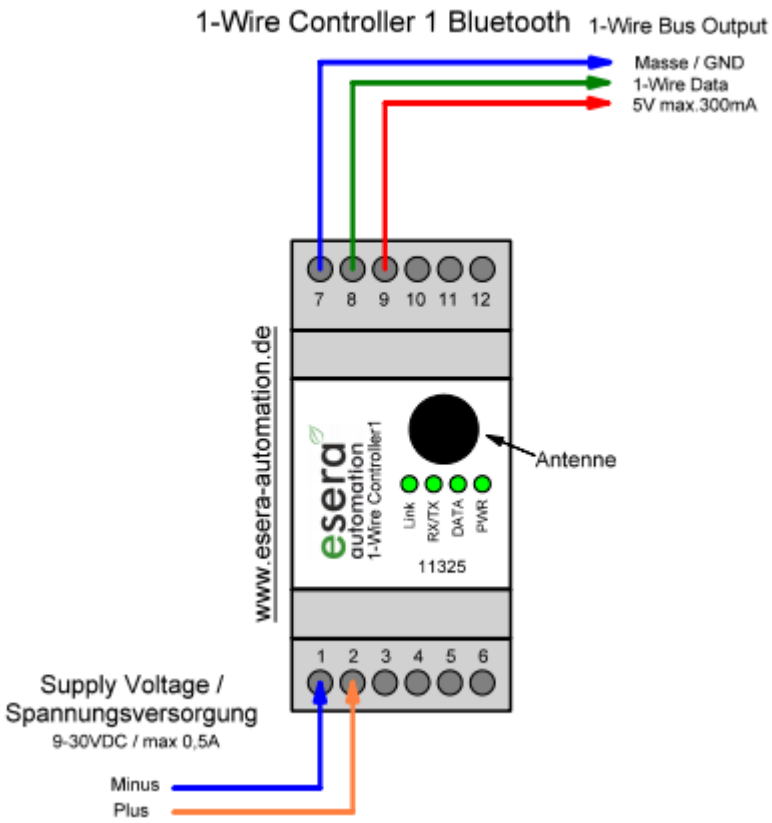

10 Connection example 1-Wire Hub III, sensors and actuators

Der 1-Wire Controller 1 Ethernet is shown here as an example of the 1-Wire Controller 1 Bluetooth.

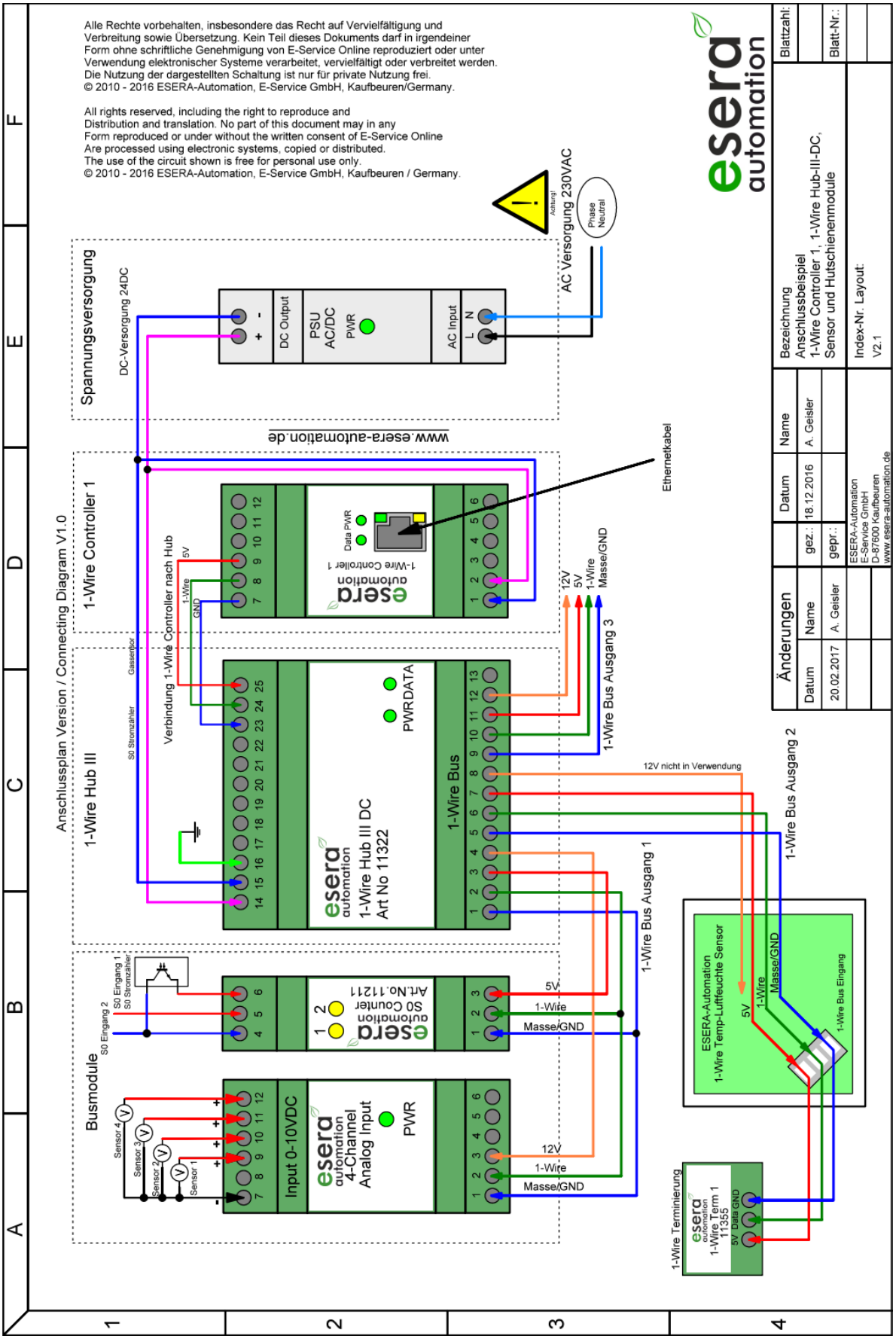

11 Connection example with iButton reader unit

The 1-Wire Controller 1 Ethernet is shown here as an example for the 1-Wire Controller 1 Bluetooth.

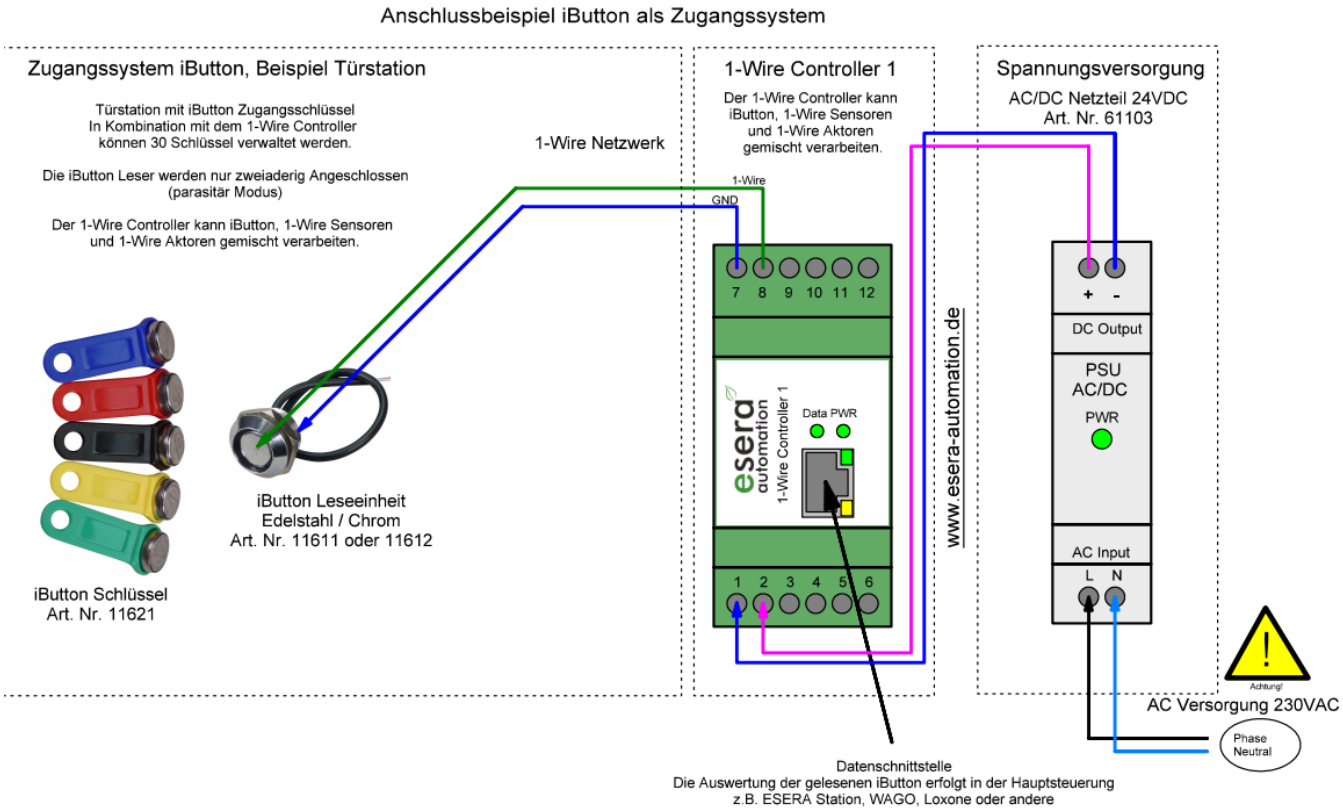

12 Software

Data interface ESERA ASCII text protocol

The BT interface is integrated in the Windows ESERA program "Config-Tool 3" in the form of a COM interface. You can find this program in the download area of the ESERA Online shop.

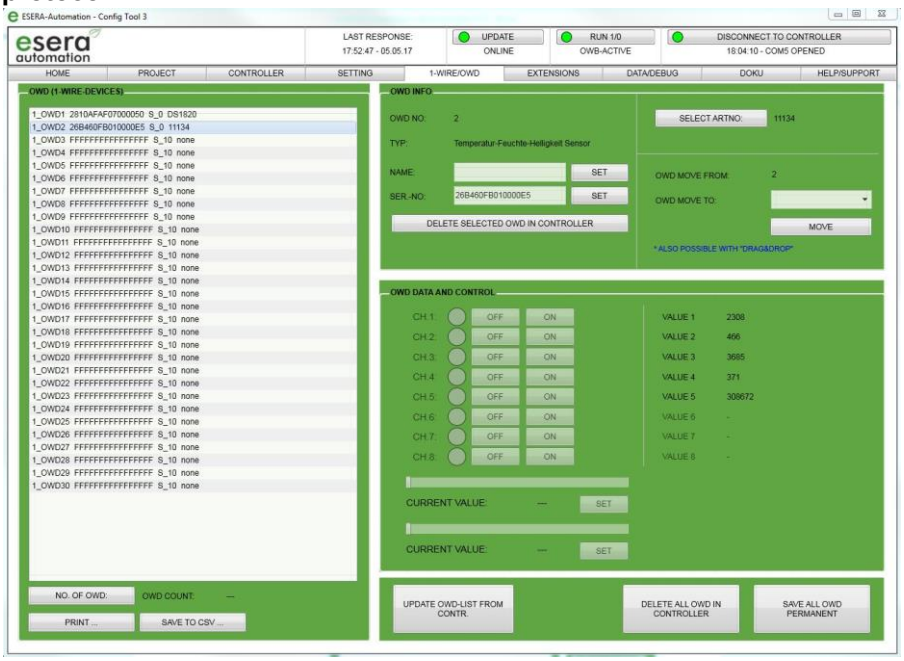

Configuration and Communication with 1-Wire Controller 1

The 1-Wire Controller 1 has extensive configuration and formatting options that can be read and operated with the ESERA "Config Tool 3".
Since communication between the 1-Wire controller 1 and the Config tool 3 takes place via the open ESERA ASCII text protocol, you can also exchange data with any terminal program (e.g. Hercules or Putty) via UDP/TCPIP with the 1-Wire controller 1 at any time and perform configuration.
Details on the communication commands can be found in the document "Commandlist", which can be found in the download area of the ESERA online shop and within Config-Tool 3.

Firmware Upgrade
The latest device software (firmware) can also be found in the download area of the ESERA Online Shop.
The update is performed using Config-Tool 3.

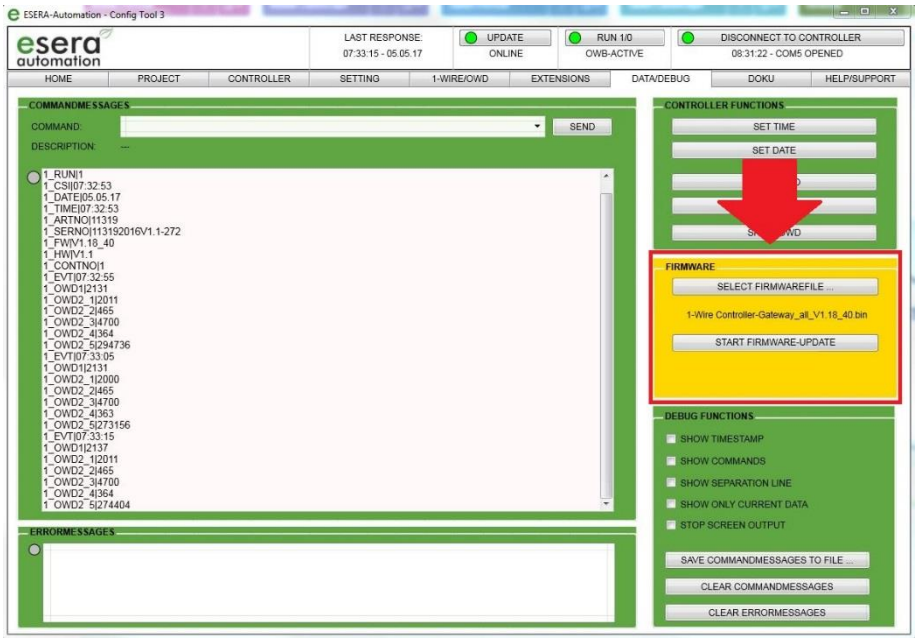

13 Operating conditions

The module may only be operated at the voltages and ambient conditions specified for it. The device can be operated in any position. The device is intended for use in dry and dust-free rooms.
If condensation forms, wait at least 2 hours for the device to acclimatise.
The modules may only be put into operation under the supervision of a qualified electrician. Do not operate the module in an environment where flammable gases, vapours or dust are present or can be present.

14 Assembly

The installation site must be protected against moisture. The device may only be used in dry indoor rooms. The device is intended for mounting inside a control cabinet as a stationary device.

15 Disposal note

Do not dispose of the device in household waste! Electronic devices must be disposed of in accordance with the Directive on Waste Electrical and Electronic Equipment on local Dispose of at collection points for old electronic equipment!

16 Safety instructions

When using products that come into contact with electrical voltage, the valid VDE regulations must be observed, especially VDE 0100, VDE 0550/0551, VDE 0700, VDE 0711 and VDE 0860

- All final or wiring work must be carried out with the power turned off.
- Before opening the device, always unplug or make sure that the unit is disconnected from the mains.
- Components, modules or devices may only be put into service if they are mounted in a contact proof housing. During installation they must not have power applied.
- Tools may only be used on devices, components or assemblies when it is certain that the devices are disconnected from the power supply and electrical charges stored in the components inside the device have been discharged.
- Live cables or wires to which the device or an assembly is connected, must always be tested for insulation faults or breaks.
- If an error is detected in the supply line, the device must be immediately taken out of operation until the faulty cable has been replaced.
- When using components or modules it is absolutely necessary to comply with the requirements set out in the accompanying description specifications for electrical quantities.
- If the available description is not clear to the non-commercial end-user what the applicable electrical characteristics for a part or assembly are, how to connect an external circuit, which external components or additional devices can be connected or which values these external components may have, a qualified electrician must be consulted.
- It must be examined generally before the commissioning of a device, whether this device or module is basically suitable for the application in which it is to be used.
- In case of doubt, consultation with experts or the manufacturer of the components used is absolutely necessary.

- For operational and connection errors outside of our control, we assume no liability of any kind for any resulting damage.
- Kits should be returned without their housing when not functional with an exact error description and the accompanying instructions. Without an error description it is not possible to repair. For time-consuming assembly or disassembly of cases charges will be invoiced.
- During installation and handling of components which later have mains potential on their parts, the relevant VDE regulations must be observed.
- Devices that are to be operated at a voltage greater than 35 VDC / 12mA, may only be connected by a qualified electrician and put into operation.
- Commissioning may only be realized if the circuit is built into a contact proof housing.
- If measurements with an open housing are unavoidable, for safety reasons an isolating transformer must be installed upstream or a suitable power supply can be used.
- After installing the required tests according to DGUV / regulation 3 (German statutory accident insurance, https://en.wikipedia.org/wiki/German_Statutory_Accident_Insurance) must be carried out.

17 Warranty

ESERA GmbH guarantees that the goods sold at the time of transfer of risk to be free from material and workmanship defects and have the contractually assured characteristics. The statutory warranty period of two years begins from date of invoice. The warranty does not extend to the normal operational wear and normal wear and tear. Customer claims for damages, for example, for non-performance, fault in contracting, breach of secondary contractual obligations, consequential damages, damages resulting from unauthorized usage and other legal grounds are excluded. Excepting to this, ESERA GmbH accepts liability for the absence of a guaranteed quality resulting from intent or gross negligence. Claims made under the Product Liability Act are not affected.
If defects occur for which the ESERA GmbH is responsible, and in the case of replacement goods, the replacement is faulty, the buyer has the right to have the original purchase price refunded or a reduction of the purchase price.
ESERA GmbH accepts liability neither for the constant and uninterrupted availability of the ESERA GmbH or for technical or electronic errors in the online offer.
We are constantly developing our products further and reserve the right to make changes and improvements to any of the products described in this documentation without prior notice. Should you require documents or information on older versions, please contact us by e-mail at info@esera.de.

18 Trademarks

All mentioned designations, logos, names and trademarks (including those which are not explicitly marked) are trademarks, registered trademarks or other copyright or trademarks or titles or legally protected designations of their respective owners and are hereby expressly recognized as such by us. The mention of these designations, logos, names and trademarks is made for identification purposes only and does not represent a claim of any kind on the part of ESERA GmbH on these designations, logos, names and trademarks. Moreover, from their appearance on ESERA GmbH webpages it cannot be concluded that designations, logos, names and trademarks are free of commercial property rights.
ESERA and Auto-E-Connect are registered trademarks of ESERA GmbH.

19 Contact

ESERA GmbH
Adelindastrasse 20
87600 Kaufbeuren
GERMANY
Tel.: +49 8341 999 80-0
Fax: +49 8341 999 80-10
www.esera.de
info@esera.de
WEEE-Number: DE30249510