Art. No. 11336

User Guide
1-Wire Gateway 11 Modbus TCP

- 1-Wire Gateway for autonomous communication between PLC and a 1-Wire Sensor and Actuator network
- Data evaluation of all 1-Wire modules in 2 seconds increments
- Modbus data output as TCP protocol
- Processed sensor- and actuator data
- Status of each sensor and actuator can be called up
- Easy configuration
- No extra drivers needed
- Data storage in case of loss of communication to the host system (optional)
- Power supply for 1-Wire network
- Designed for all dimensions of 1-Wire networks
- DIN rail enclosure for switchboard assembly
- Wide range of power voltage
- Management of all ESERA-Automation 1-Wire modules and many of standard 1-Wire sensors and actuators (switch-module)

1 Introduction

Before you start assembling the **1-Wire Gateway 11 Modbus TCP** and before you take the device into operation, please read this assembly and operating instruction carefully to the end, especially the section referring to the safety notes.
We recommend to use Config-Tool 3 for all kind of setup and configuration tasks. Please find the latest release on our website at, www.esera.de. Please also refer to the Help/Support section to find the user guide for Config-Tool 3.

2 Product description

Standard Modbus TCP protocol

You can use your industrial controller, e.g. SPS and standard TCP protocol to connect to the 1-Wire Gateway 11. Addressing is similar to other Modbus systems and easy to handle. You can use addresses for system data, sensor data and actuator devices. A complete address list including all available data points is available for download on our webpage. These addresses are also available within the ESERA configuration software Config-Tool 3.

3 Auto-E-Connect® Support

The ESERA **Auto-E-Connect®** 1-Wire Plug and Play system will be used for the 1-Wire Bus supported. This enables fully automatic configurations of 1-Wire sensors and actuators on the 1-Wire bus. It is optimized for industrial applications and enables significant added value beyond the sensor and chip data.
The Auto-E-Connect function automatically recognizes ESERA chips, sensors and actuators, starts suitable libraries and outputs fully formatted data.

The Auto-E-Connect functionality will be available from mid-2020 via 1-Wire Controllers, 1-Wire Gateways and 1-Wire ECO from ESERA available.
Further information on ESERA Auto-E-Connect can be found on the ESERA website, ESERA Config-Tool 3, or in the download area for this article in the ESERA Webshop.

4 Product features

Standalone controller
The 1-Wire Gateway 11 Modbus is designed to control 1-Wire Networks. You no longer have to worry about 1-Wire commands or algorithms to analyze sensor data. 1-Wire Gateway 11 Modbus scans 1-Wire Networks by itself in order to identify new sensors or actuator devices. All data found were automatically provided in a ready to use Modbus protocol format.

Formatted Data Output
1-Wire Gateway 11 Modbus provides plausibility checked sensor and actuator data in a ready to use format. E.g. temperature sensor provides values in Celsius degrees with 2 decimal places. You only need to divide this number by 100. Within the 1-Wire Gateway a product specific transformation table is available for most of our selling 1-Wire sensor and actuator products.

Designed for all 1-Wire Networks
The 1-Wire interface of the 1-Wire Gateway 11 Modbus is specially designed to securely support all sizes of 1-Wire networks. 1-Wire sensor devices can be operated in parasitic or normal mode at the same time.
The latest available most powerful 1-Wire interface for a maximum level of data security has been used. This includes complex network structures as well.

1-Wire Gateway 11 Modbus configuration
Free configuration software (Config-Tool 3) is provided. When using Config-Tool 3, the latest documentation is available at any time hence it automatically updates via internet. This software is available for download on our webpage. Communication to Modbus TCP is parallel with no switching.

System time / real time clock
No real time clock available in your system? No problem at all. 1-Wire Gateway 11 Modbus is providing time and date as real time clock including an integrated backup battery. Data plausibility check is possible at any time.

Power supply
Input voltage for 1-Wire Gateway 11 Modbus is 9 – 30 VDC. Therefore it can be used for 12 V as well as 24 VDC (industrial applications). Appropriate hat-rail mounted power supplies or power plugs can be found in our webshop.

Operation
“How-To”-Videos for setup and operation can be found on our website www.esera.de (Service and Support – How to – Support videos).

Basics and tips for 1-Wire network systems can be found in our webshop (https://www.esera.de/1-wire-grundlagen/) or in our e-book which is also available in our webshop (https://www.esera.de/service-support/dokumentation/352/grundlagen-1-wire-bus-ebook?number=11901).

5 Technical data

Data Interface:	Modbus TCP and ESERA ASCII text protocol
Ethernet Interface:	TCP/IP or UDP - 10/100 MBit Ethernet Interface (RJ45) - Auto Negotiation (Full-duplex and Half-duplex) - Auto MDI/MDIX - Support for DHCP and fix IP-address
Firmware Update:	via ESERA Config-Tool 3
Power supply:	9 – 30 VDC
Power consumption:	maximum 500 mA
1-Wire interface:	1-Wire bus (5 V, GND and data)
Protective circuits:	ESD protection and polarity protection
Connection:	Screw terminals (up to 2,5 qmm wire cross section)
Output voltage:	5 V (+/- 10 %), maximum 200 mA, overload-proof and short-circuit-proof
Isolation:	Galvanic separation among data and 1-Wire interface

6 Ambient conditions

Temperature, operation	-10 °C up to +55 °C (extended temperature range available upon request)
Air humidity:	10 – 92 % (non-condensing)
Protection system:	IP20
Protection class:	III
Dimensions:	35 x 90 x 70mm (WxHxD)

7 Conformity

EN 50090-2-2
EN 61000-4-2 ESD
EN 61000-4-3 HF
EN 61000-4-4 Burst
EN 61000-4-5 Surge
EN 61000-6-1 Fault-free operation
EN 61000-6-3 Stray radiation
RoHS

8 LED indicators

The module status will be displayed by various LEDs. Please refer to the following table for their functions:

LED status	Description	Function
LED Green	PWR	power indicator
LED Green	DATA	• LED flashes 3 times after power on • Flashes at 1-Wire activity • Flashes while transferring data by the data interface • Flashes rapidly if "KAL Receive" has been activated no “KAL messages" received.
LED Green Data Interface		Network Link LED Is lit when connected
LED Yellow Data interface		Network activity LED Is lit while data submission by data interface

9 Wiring diagramm

Module topside (1-Wire Bus)

7 = Ground 1-Wire
8 = 1-Wire Data
9 = + 5 V Output

Module bottom side
(supply voltage 9 – 30 VDC)

1 = Negative supply voltage
2 = Positive supply voltage

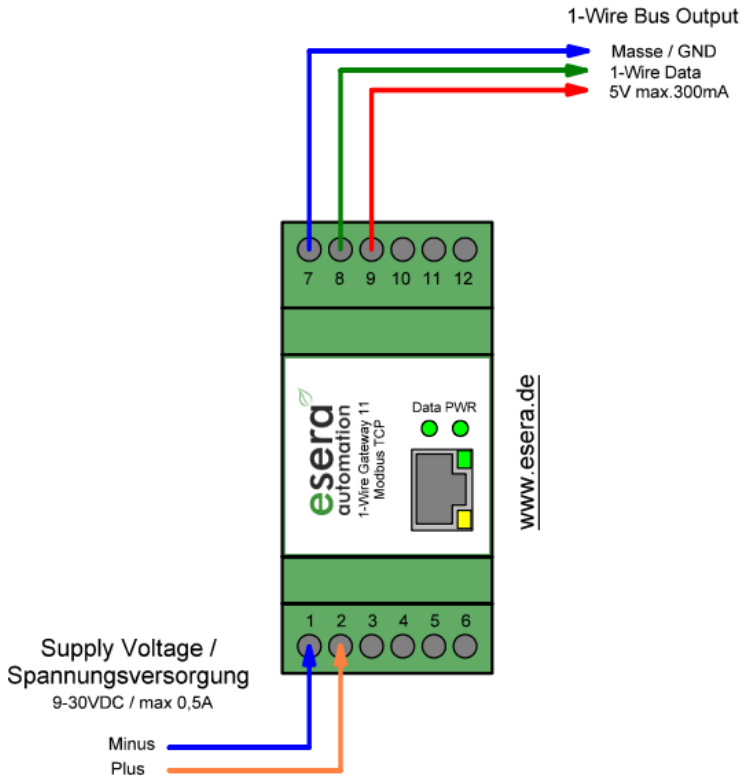

10 Connection – Example with multisensory

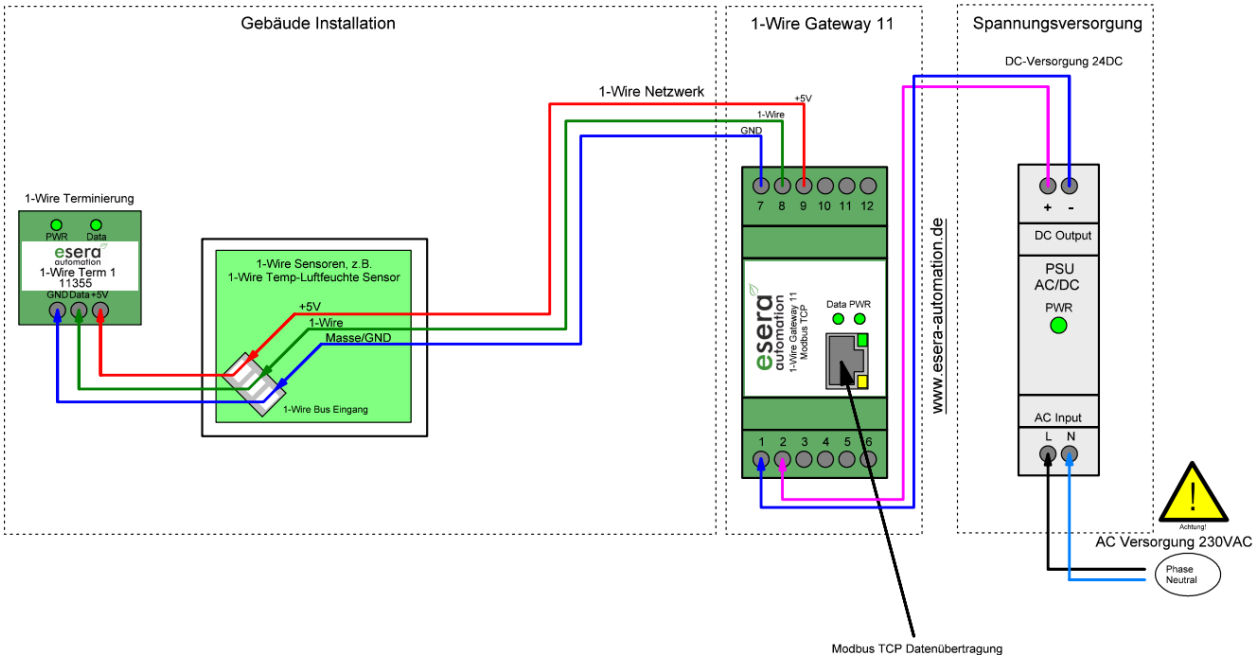

11 Connection – Example with 1-Wire Hub III sensors and actuators

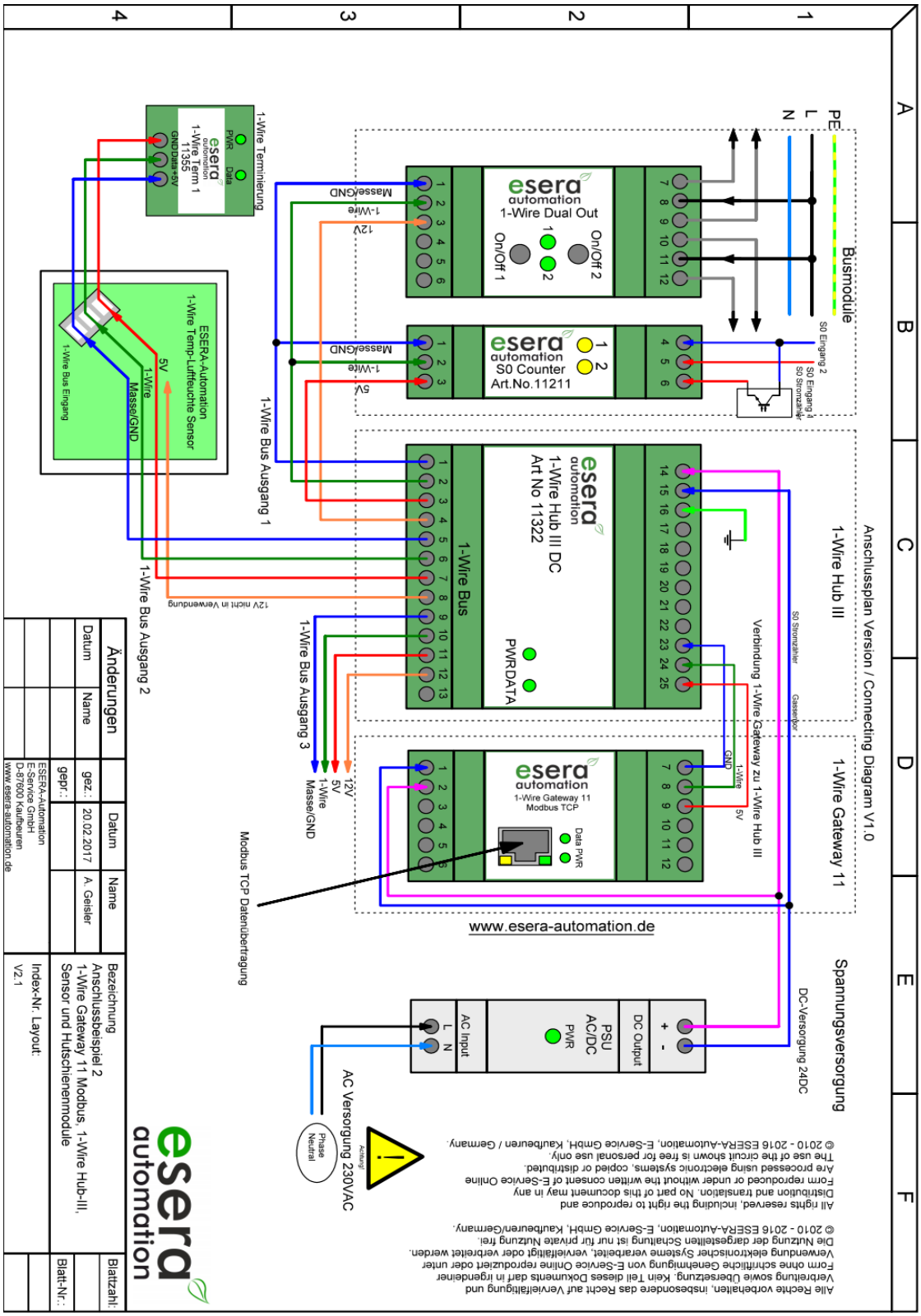

12 Software

Data interface Modbus TCP and ESERA ASCI Text protocol

To configure the Ethernet interface please use ESERA Config-Tool 3. This software is available for download on our webpage.

12.1 Configuration and communication with 1-Wire Gateway 11

1-Wire Gateway 11 offers various configuration and formatting options. All options can be read out and controlled by the ESERA Config-Tool 3. 1-Wire Gateway 11 and Config-Tool 3 communication is based on an open ESERA ASCII text protocol. Therefore configuration and data transfer with any terminal program (such as Hercules or Putty) by UDP/TCPIP and 1-Wire Gateway 11 is possible at any time. For detailed communication commands please refer to the "Programming Manual" which is available for download in our webshop.

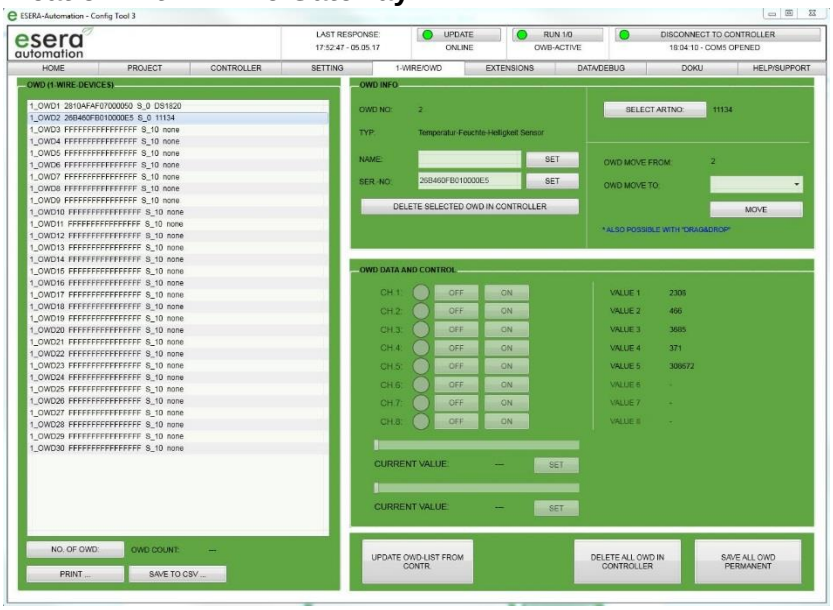

13 Firmware-update

A firmware update can be performed with the Config Tool 3 software under the "DEBUG/DATA" tab.
The button "DOWNLOAD FIRMWARE" opens a window to download new software (firmware) for the 1-Wire Controller / 1-Wire Gateway.
The firmware can be used for all device versions of the 1-Wire Controller and 1-Wire Gateway. The corresponding functionality is released on the installed device adapted.
As of firmware version V1.18_38, it is no longer necessary to press the reset button of the 1-Wire Controller / 1-Wire Gateway to update.

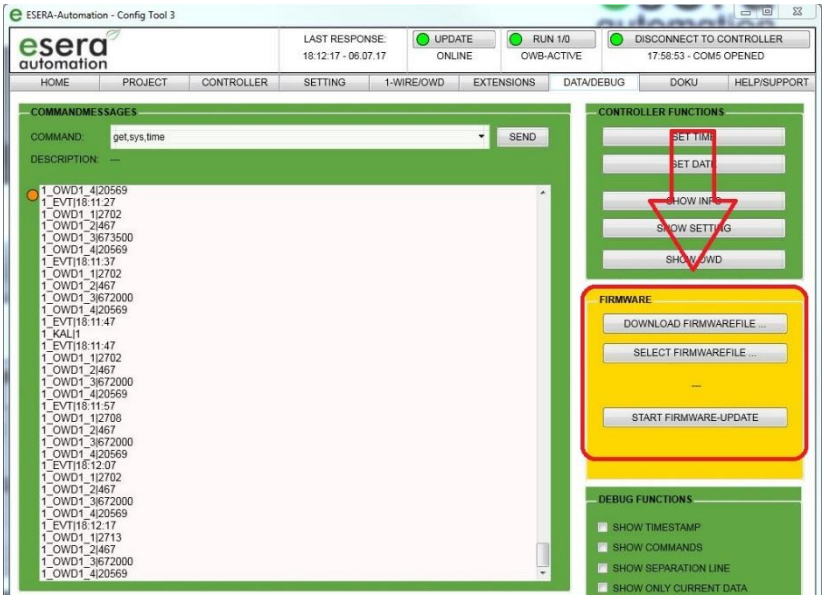

Recovery function Firmware-update

If the update is faulty, e.g. due to a power failure during the update, you can use the recovery function. To do this, hold down the reset button (located under hole 11 on the top of the module), start the update in Config Tool 3 and release the reset button in Config Tool 3 after approx. 1 second after starting. Now the update should start. After an update we recommend to disconnect the 1-Wire Controller / 1-Wire Gateway from the power supply for approx. 30 seconds and to restart it. If you have any problems with the installation, we will be happy to help you. Simply contact our support by e-mail (support@esera.de).

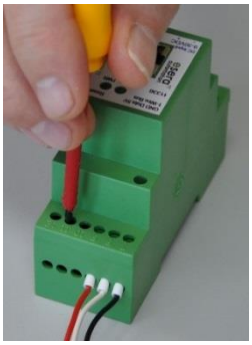

14 Communication

14.1 ESERA ASCII text protocol

The 1-Wire Gateway 11 Modbus provides two protocols. The ESERA text protocol in ASCII format can easily be used for configuration and analysis. Particular importance was attached here to good legibility and traceability. The ESERA text protocol works with "GET" and "SET" commands, which probably every programmer has already used in his own projects.
The ESERA text protocol is completely disclosed and documented. The current version of the ESERA protocol description can be found on our website,
https://www.esera.de/shop/software/downloads-firmware-1-wire-controller-1-wire-gateway/
and within the ESERA Config Tool 3 software.

14.2 Modbus TCP protocol

1-Wire Gateway 11 Modbus communication to ESERA text protocol or Modbus TCP protocol is parallel with no switching. For communication any IP address and any port can be chosen. Default is set to port 5000 and CHCP mode.
The Modbus protocol is standardized configured. Please refer to the following table for a partial address-overview. A complete address overview is available for download at the “Programming Manual” at the download area of the 1-Wire Gateway 11 Modbus.

Partial Modbus address specification

Specification	reading address	number of words	type of data
Gateway No.	60000	1	Word
Article-No.	60001	1	Word
Firmware Version	61000	4	String
Hardware	61010	3	String
Serial number	61020	9	String
Time	61030	4	String
Date	61035	4	String
…			

1-Wire bus sensors and actuators			
OWD 1 / 1-Wire module	40100	1	Integer
	40101, 40102	2	DWord1
	40103, 40104	2	DWord2
	40105, 40106	2	DWord3
	40107, 40108	2	DWord4
	40109, 40110	2	DWord5
	40111, 40112	2	DWord6
	40113, 40114	2	DWord7
	40115, 40116	2	DWord8
OWD 2 / 1-Wire module	40200	1	Integer
	40201, 40202	2	DWord1
	40203, 40204	2	DWord2
	…		

15 Operating conditions

The operation of the assembly group can take place only on condition of observing the required voltage and the ambient conditions. The operating position of the device is irrelevant. The device is meant to be used in dry and dust-free areas. Should condensed water build up, an acclimatization period of at least 2 hours must pass. Assembly groups and components do not belong into the hands of children!
The building group can be operated only under the supervision of an electrically skilled person.

In industrial facilities, the accident prevention regulations of the federation of industrial professional associations for electrical installations and equipments must be observed.
Do not operate the assembly group in an environment with inflammable gases, vapours or dusts or in an environment where such gases, vapours or dusts may be found.

16 Assembly

The location of the assembly must be protected against humidity. The device may be used only in dry inside spaces and protected outside areas. The device is designed to be assembled as a fixed device within a switchboard.

17 Disposal note

Do not dispose of the device within the household waste!
According to the directive concerning old electrical and electronic appliances, electronic devices must be disposed of via the collecting points for old electronic appliances!

18 Safety instructions

When using products that come into contact with electrical voltage, the valid VDE regulations must be observed, especially VDE 0100, VDE 0550/0551, VDE 0700, VDE 0711 and VDE 0860

- All final or wiring work must be carried out with the power turned off.
- Before opening the device, always unplug or make sure that the unit is disconnected from the mains.
- Components, modules or devices may only be put into service if they are mounted in a contact proof housing. During installation they must not have power applied.
- Tools may only be used on devices, components or assemblies when it is certain that the devices are disconnected from the power supply and electrical charges stored in the components inside the device have been discharged.
- Live cables or wires to which the device or an assembly is connected, must always be tested for insulation faults or breaks.
- If an error is detected in the supply line, the device must be immediately taken out of operation until the faulty cable has been replaced.
- When using components or modules it is absolutely necessary to comply with the requirements set out in the accompanying description specifications for electrical quantities.
- If the available description is not clear to the non-commercial end-user what the applicable electrical characteristics for a part or assembly are, how to connect an external circuit, which external components or additional devices can be connected or which values these external components may have, a qualified electrician must be consulted.
- It must be examined generally before the commissioning of a device, whether this device or module is basically suitable for the application in which it is to be used.
- In case of doubt, consultation with experts or the manufacturer of the components used is absolutely necessary.
- For operational and connection errors outside of our control, we assume no liability of any kind for any resulting damage.
- Kits should be returned without their housing when not functional with an exact error description and the accompanying instructions. Without an error description it is not possible to repair. For time-consuming assembly or disassembly of cases charges will be invoiced.
- During installation and handling of components which later have mains potential on their parts, the relevant VDE regulations must be observed.
- Devices that are to be operated at a voltage greater than 35 VDC / 12mA, may only be connected by a qualified electrician and put into operation.
- Commissioning may only be realized if the circuit is built into a contact proof housing.
- If measurements with an open housing are unavoidable, for safety reasons an isolating transformer must be installed upstream or a suitable power supply can be used.
- After installing the required tests according to DGUV / regulation 3 (German statutory accident insurance, https://en.wikipedia.org/wiki/German_Statutory_Accident_Insurance) must be carried out.

19 Warranty

ESERA GmbH guarantees that the goods sold at the time of transfer of risk to be free from material and workmanship defects and have the contractually assured characteristics. The statutory warranty period of two years begins from date of invoice. The warranty does not extend to the normal operational wear and normal wear and tear. Customer claims for damages, for example, for non-performance, fault in contracting, breach of secondary contractual obligations, consequential damages, damages resulting from unauthorized usage and other legal grounds are excluded. Excepting to this, ESERA GmbH accepts liability for the absence of a guaranteed quality resulting from intent or gross negligence. Claims made under the Product Liability Act are not affected.

If defects occur for which ESERA GmbH is responsible, and in the case of replacement goods, the replacement is faulty, the buyer has the right to have the original purchase price refunded or a reduction of the purchase price. ESERA GmbH accepts liability neither for the constant and uninterrupted availability of the ESERA GmbH or for technical or electronic errors in the online offer.
We develop our products further and we reserve the right to make changes and improvements to any of the products described in this documentation without prior notice. If you need documentation or information about older product versions, contact us by email at info@esera.de.

20 Trademarks

All mentioned designations, logos, names and trademarks (including those which are not explicitly marked) are trademarks, registered trademarks or other copyright or trademarks or titles or legally protected designations of their respective owners and are hereby expressly recognized as such by us. The mention of these designations, logos, names and trademarks is made for identification purposes only and does not represent a claim of any kind on the part of ESERA GmbH on these designations, logos, names and trademarks. Moreover, from their appearance on ESERA GmbH webpages it cannot be concluded that designations, logos, names and trademarks are free of commercial property rights.
ESERA and Auto-E-Connect are registered trademarks of ESERA GmbH.

21 Contact

ESERA GmbH
Adelindastrasse 20
87600 Kaufbeuren
GERMANY
Tel.: +49 8341 999 80-0
Fax: +49 8341 999 80-10
www.esera.de
info@esera.de
WEEE-Number: DE30249510